ENGINE, VALVE COVER - Z26NEY99A4/B4/A6/B6 (C702911)

2026 RZR - RZR XP S 1000 ULTIMATE (R01) - Z26NEY99A4/B4/A6/B6

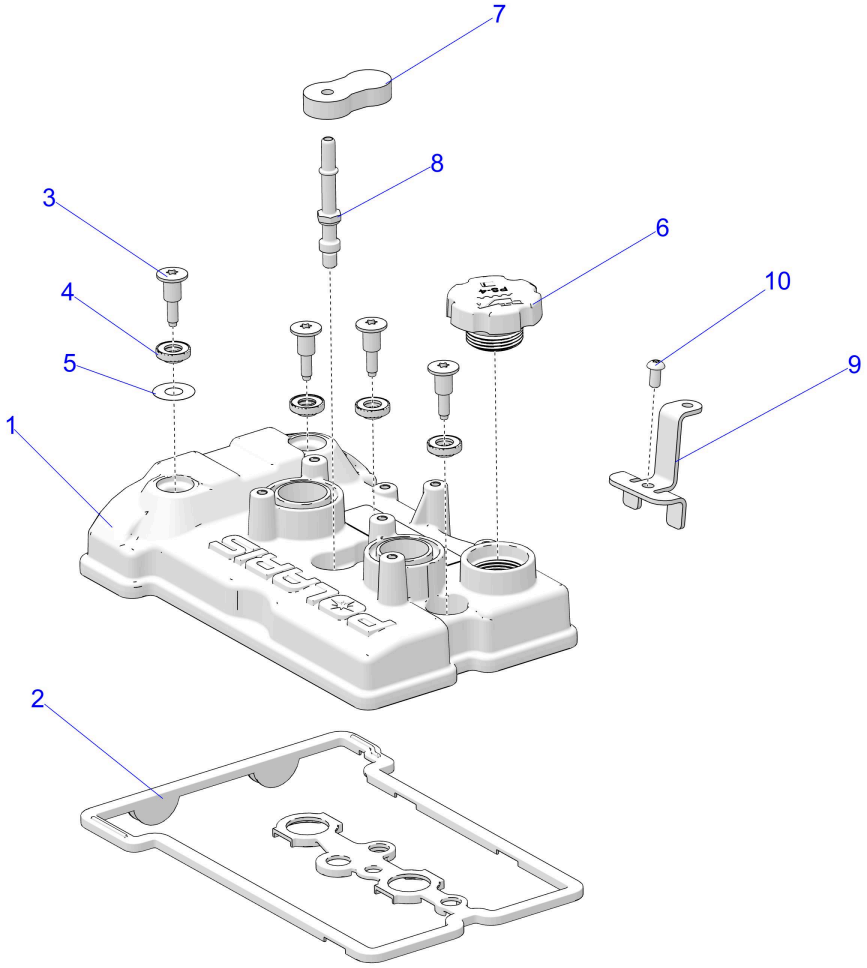

© 2021 Polaris Industries Inc.

C702911

Reference #	Part#	Description	Quantity
1	5144402	COVER-VALVE,MACH,2CYL,DOHC	1
2	5416711	SEAL-VALVE COVER	1
3	7519165	SCREW-TXPH-M6X1.0X14 8.8 A2K SHB	4
4	5415190	ISOLATOR, VALVE COVER	4
5	7556750	WASHER-GROUNDING	1
6	5414362	O-RING-FILL CAP	1
6	3024078	ASM-OIL FILL CAP,THREADED	1
7	5814933	PLUG-VALVE COVER,PORON	1
8	7055624	FITTING-BLEED	1
9	5269637-329	BRKT-HEAD,VENT,LINE,ECOAT	1

10	7518330	SCR-TORX BTNHD,M6X12,0600129	1

Copyright 1996-2026 Polaris Industries U.S.A All rights reserved.